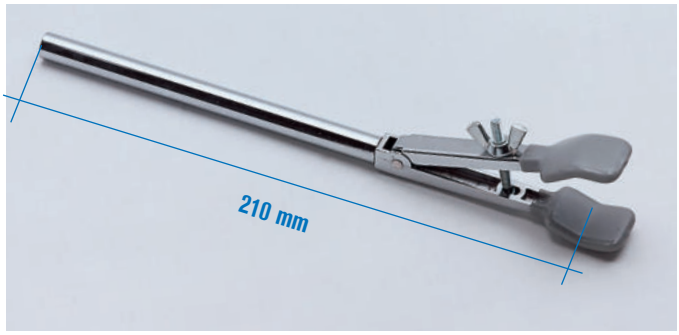

CLAMP FOR BURETTES AND TUBES
Made of chrome plated metal with two prong jaws coated with PVC.
For Ø from 7 to 25 mm.
Part No. 7000130

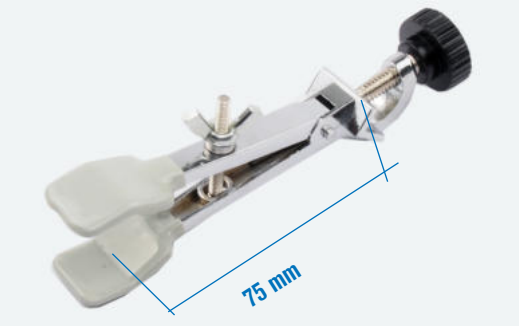

BOSSHEAD WITH BURETTE AND TUBE CLAMP
Made of chrome plated metal with PVC coated double prong jaws.
For Ø from 7 to 25 mm.
Part No. 7000140

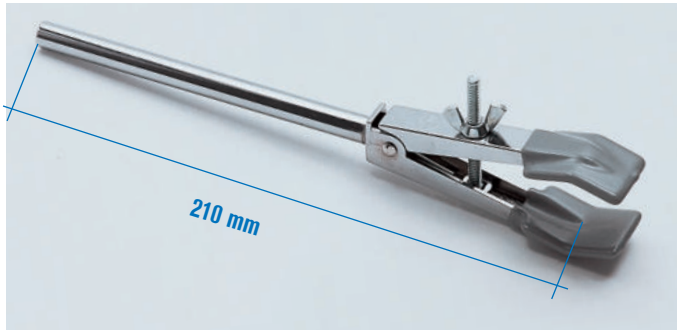

CLAMP FOR BURETTES AND CONDENSERS
Made of chrome plated metal with PVC coated jaws.
For Ø from 12 to 45 mm.
Part No. 7000131

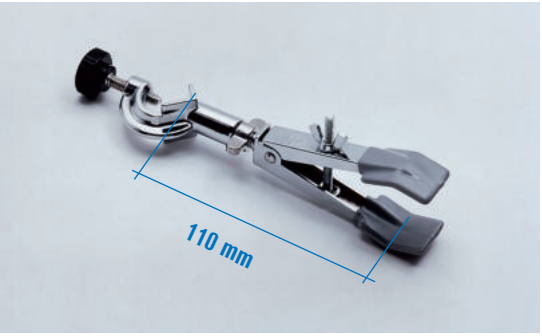

SWIVEL CLAMP BOSSHEAD FOR CONDENSERS
Swivel clamp with double PVC lined jaws For Ø from 12 to 45 mm.
Part No. 7000141

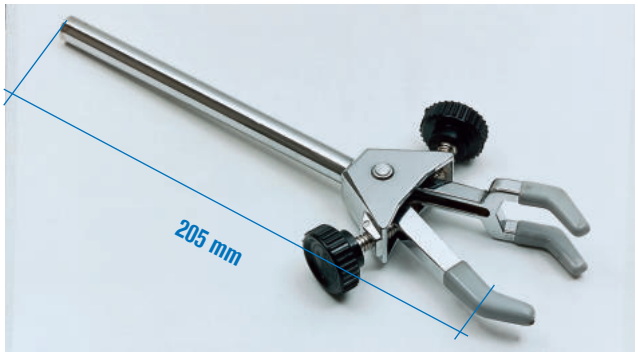

CLAMP "TRIPLEX"
Three pronged PVC coated clamp made of chrome plated metal.
For Ø from 0 to 35 mm.
Part No. 7000160

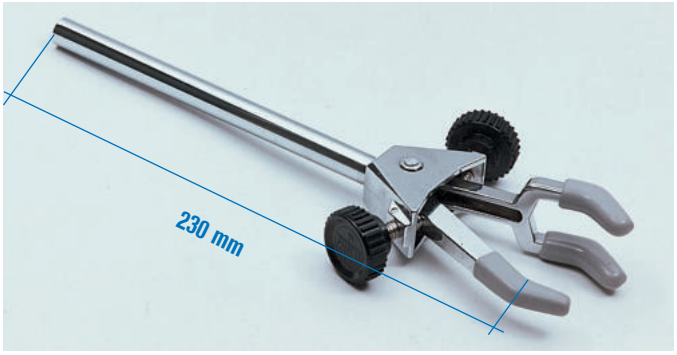

CLAMP "TRIPLEX"
Three pronged PVC coated clamp made of chrome plated metal.
For Ø from 0 to 60 mm.
Part No. 7000161

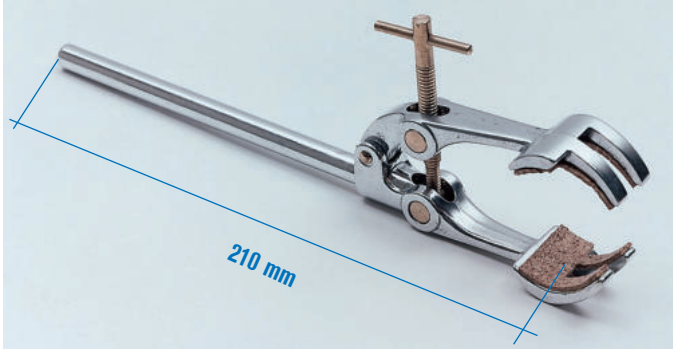

UNIVERSAL CLAMP "MINIMAX"
Made of Dur-aluminium with cork lined jaws.
For Ø from 0 to 80 mm.
Part No. 7000403